HUIZHOU GREETECH ELECTRONICS Co.,LTD

产品规格书
Product Specification

编　号 No.: SPEC-GT02A1ENW
版　本 Version: A
总页数 Pages: 2
发出日期 Issued on: 2014/11/6

客户名称 Customer: _____

客户部件号 Customer Part No.: _____

冠泰产品名称 GREETECH Product Name: Key Switch

冠泰产品型号 GREETECH Item No.: GT02A1ENW （Red）

规格书确认 Specification For Approval

确认者 Approval by

签名或盖章 Signature: _____　　日期 Date: _____

备注:

1. 该规格书为客户与冠泰公司产品在技术方面的共识，其它相关数据上与该规格书不一致的内容都是无效的。
   This Product Specification is considered as the technical agreement on product between the receiving customer and GREETECH. Any information on the Product Catalogue which is in conflict with or different from the corresponding information of this document is considered as invalid.
2. 如果顾客收到规格书后没有信息反馈而直接向我公司订货，我们将认为贵客已接受此规格书。
   If customer issue purchase orders without confirmation by signature of this specification after receipt, such confirmation will be considered as granted upon receipt of the first purchase order.
3. 本产品规格书从生效日起 1 年后，如果没有订货返回或再次申请最新规格书时请作无效处理。
   If there is no order or no request for new specification after 1 year upon this specification is issued, the specification will be regarded as invalid.

若确认此规格书，请签复此页。Please return this copy as a certification of your approval.

规格书更改记录 Record of Changing Specification

规格书项 Item of Spec.		规格书项 Item of Spec.	
更改前 Before Change		更改前 Before Change	
更改后 After Change		更改后 After Change	
查询编号 Enquiry Ref.#		查询编号 Enquiry Ref.#	

地址: 广东省惠州市惠城区陈江镇大欣集团第三区
Address: 3RD.DIST.,TAHSIN GROUP,CHENJIANGTOWN,HUICHEN ZONE,HUIZHOU CITY,GUANGDONG PROVINCE,CHINA
电话 Tel: 86-752-5855486
传真 Fax: 86-752-5855496
电子邮箱 E-Mail: greetech@gmail.com
网址 Website: wwww.greetech.com

拟制 Prepared by: Xie Han He
审核 Checked by: Roy Wu
批准 Approved by: Gary gao

GT02A1ENW

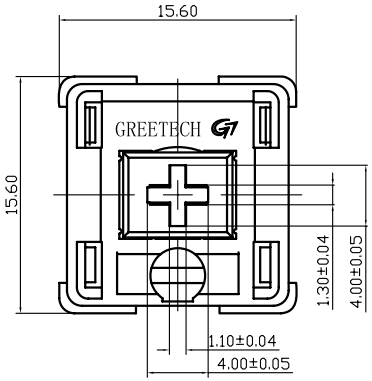

Circuit diagram

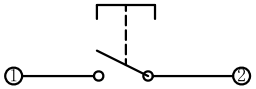

Single pole, normally open
Cross point contacts
Linear action

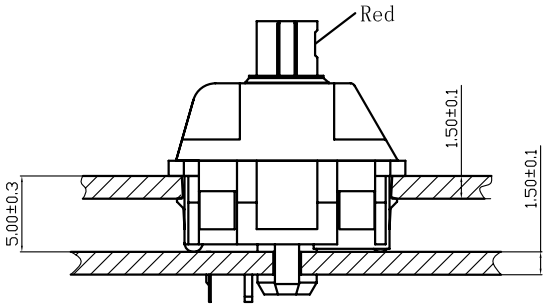

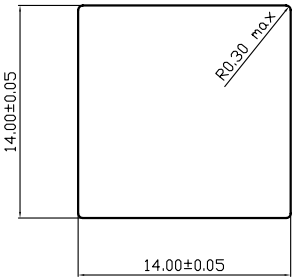

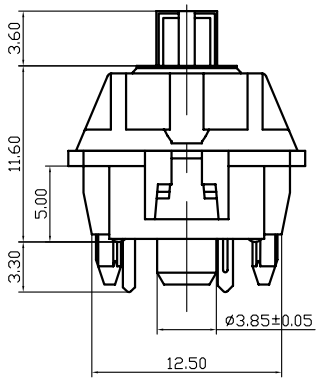

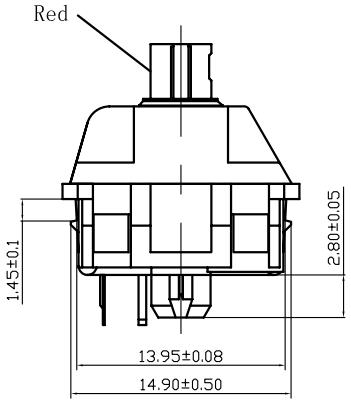

PC board mounting hole dimensions

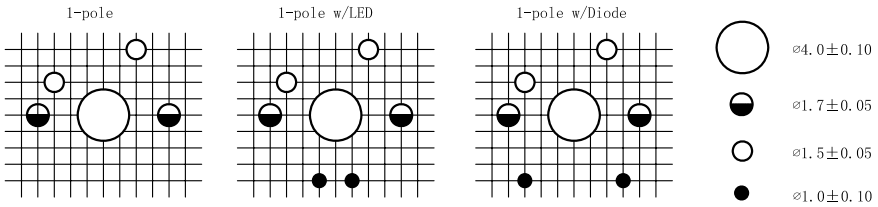

Gride line spacing=1.27mm

Typical Specifications

Operating Life	50,000,000 cycles	Rating	12V DC/AC max. 10mA AC/DC max
Operating force	60gf Max(OP=2mm)	End force	<110gf
Pretravel	2.0±0.6mm	Total travel	4.0 $^{0}_{-0.4}$ mm

REV	REF	DESCRIPTION	DWN.BY	DATE

Title: GT02 Key Switch		Material	Version: A
Model: GT02A1ENW	Designed: Liuli	Checked: ROY	Approved: Gary
Part No.: GT02A1ENW	Date: 2013-9-18	Date: 2013-9-18	Date: 2013-9-18

TOLERANCE UNLESS OTHERWISE SPECIFIED

≤1	>1~5	>5~20	>20~50	>50~100	>100~200	≥200	ANGLE
±0.05	±0.07	±0.10	±0.15	±0.20	±0.40	±0.50	±2°

HUIZHOU GREETECH ELECTRONICS CO.,LTD.